555 Timer

Ch. Srividhya
Asst Prof
ECE
JITS

Pin configuration

- The 555 timer consists of;
  - Two voltage comparators
  - A bi-stable flip flop
  - A discharge transistor
  - and a resistor divider network.

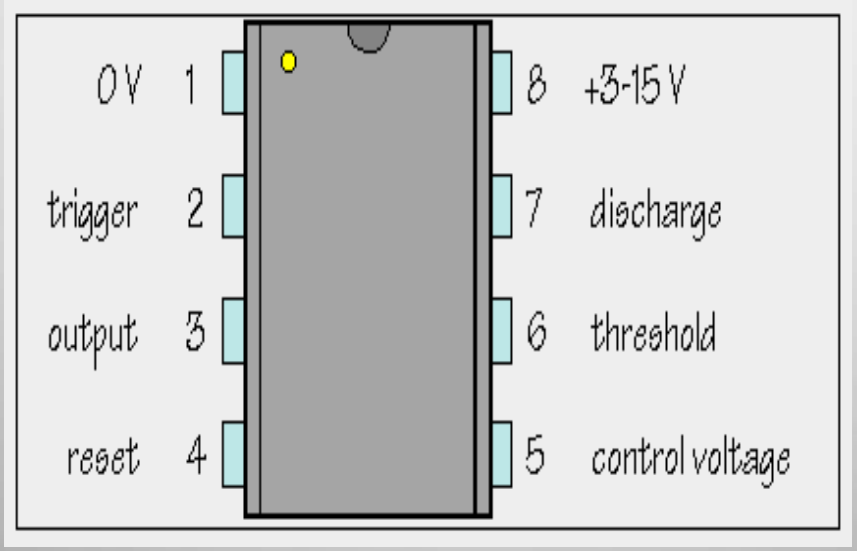

Internal Circuit Of 555 Timer

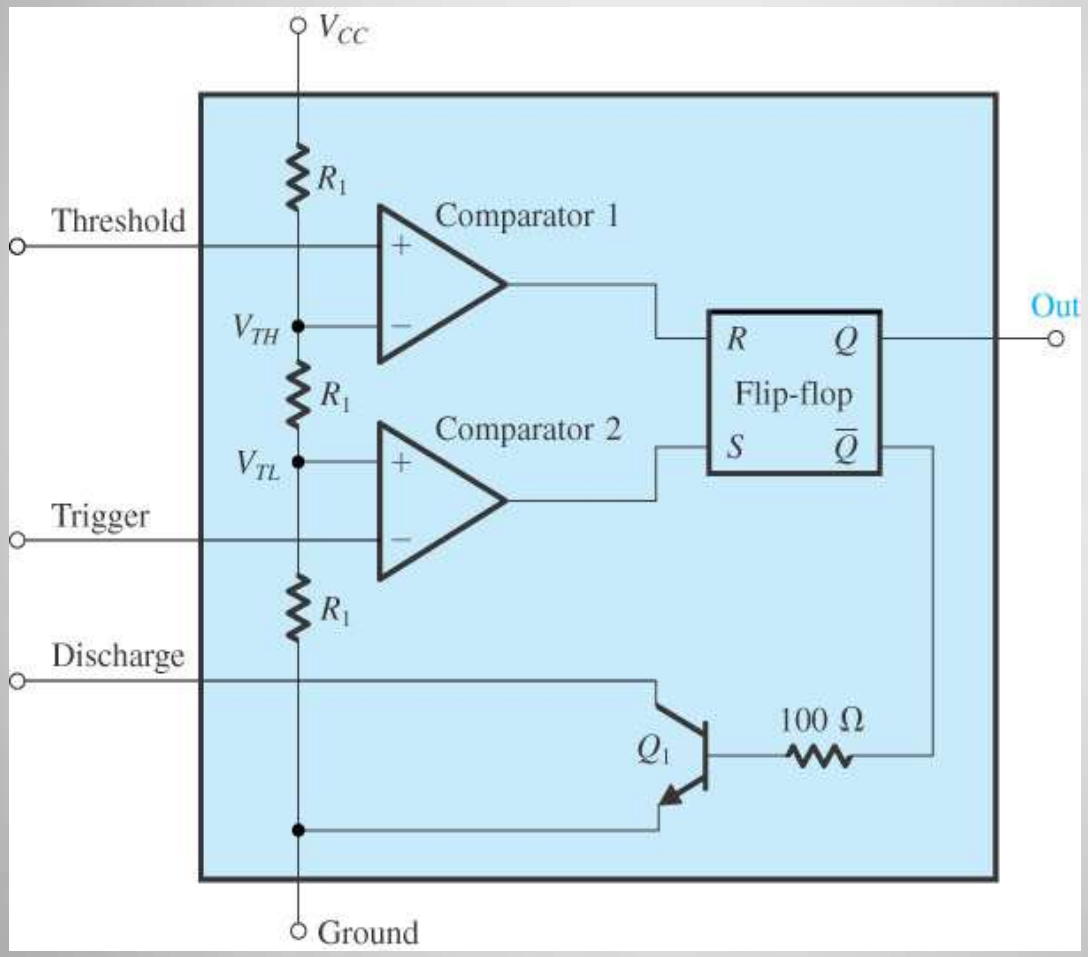

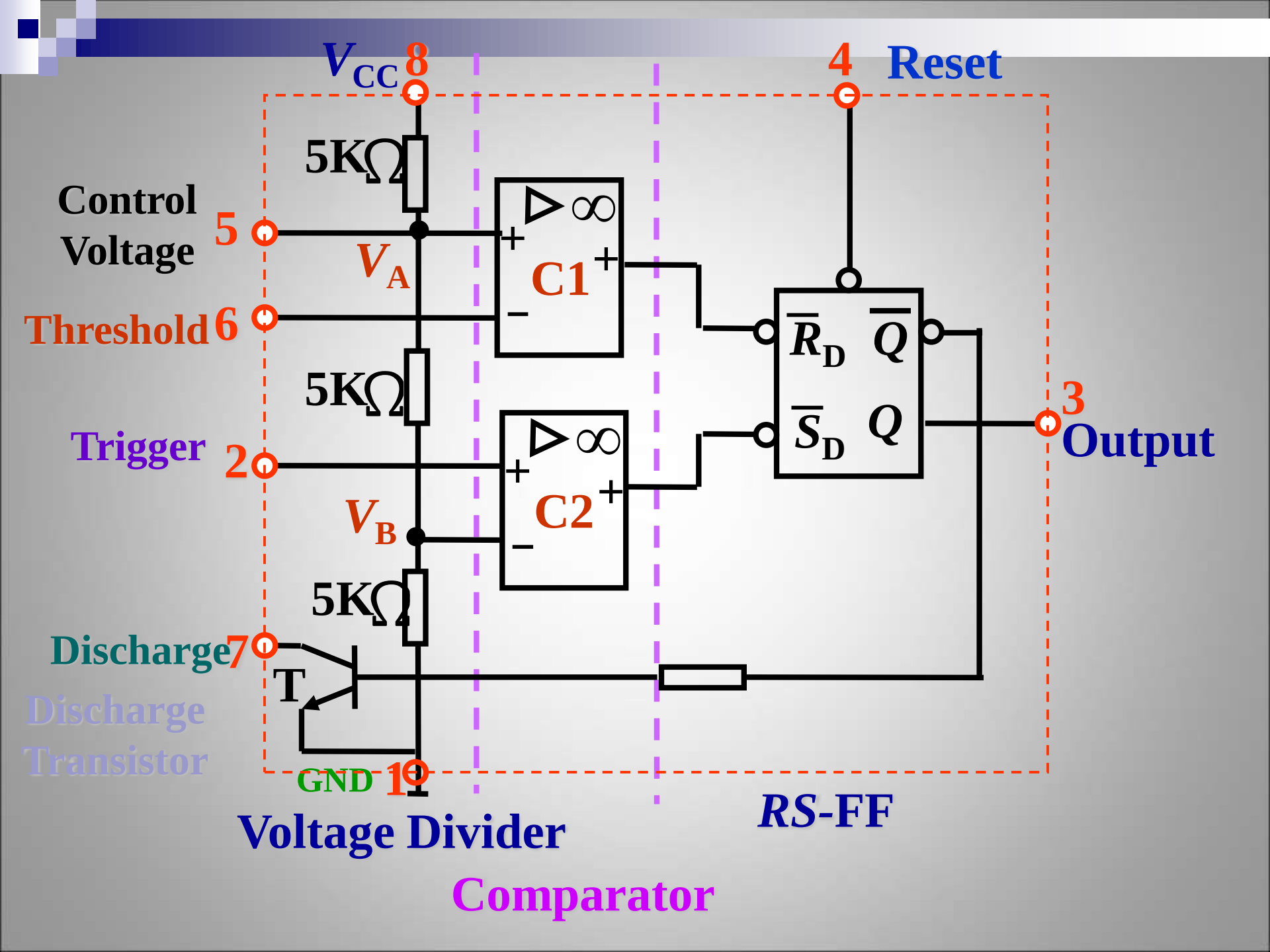
V_{CC}
8
4
Reset
5KΩ
Control
Voltage
5
V_A
C1
Threshold
6
$\overline{R}_D$
$\overline{Q}$
5KΩ
3
Output
Trigger
2
$\overline{S}_D$
Q
C2
V_B
5KΩ
Discharge
7
T
Discharge
Transistor
GND
1
Voltage Divider
RS-FF
Comparator

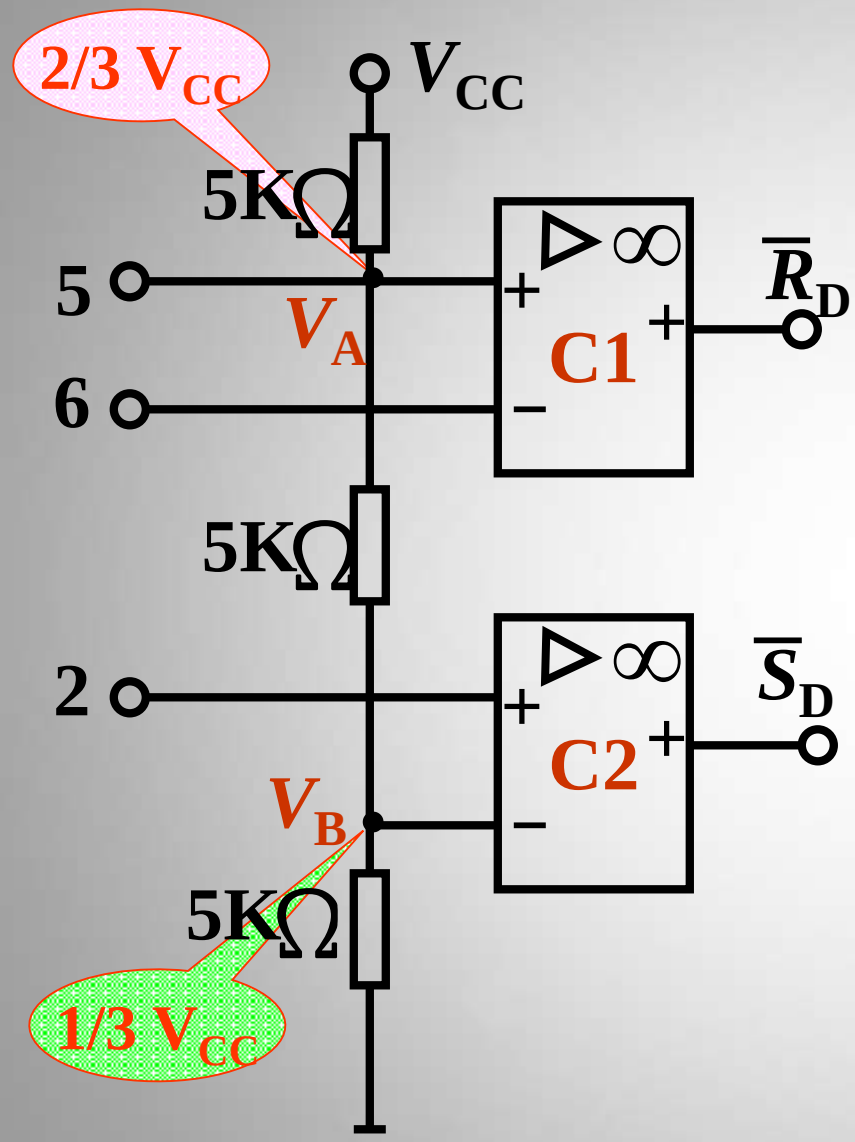

The result for comparing

V_6	V_2	$\overline{R}_D$	$\overline{S}_D$
$<2/3\ V_{CC}$	$<1/3\ V_{CC}$	1	0
$>2/3\ V_{CC}$	$>1/3\ V_{CC}$	0	1
$<2/3\ V_{CC}$	$>1/3\ V_{CC}$	1	1
$>2/3\ V_{CC}$	$<1/3\ V_{CC}$	0	0

Not permitted

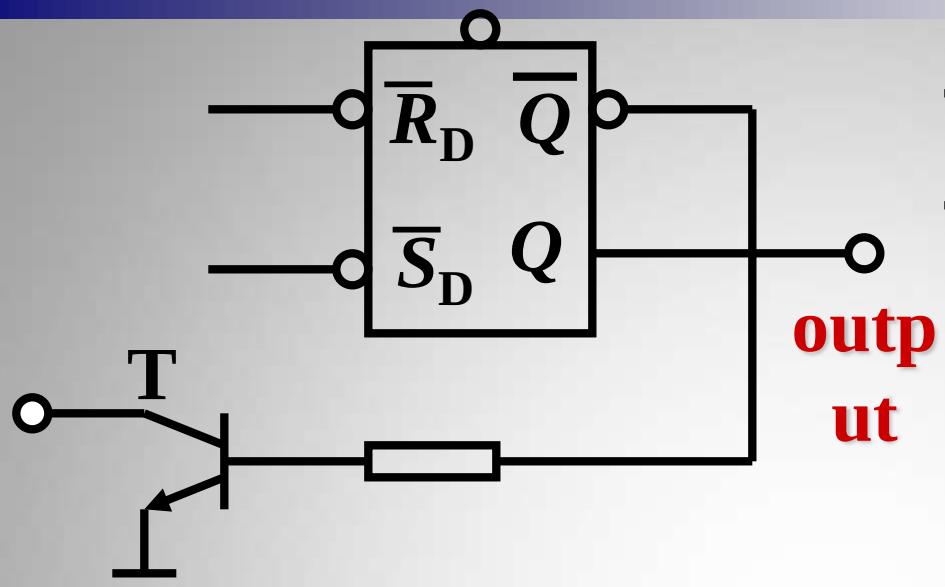

$\overline{R}_D$	$\overline{S}_D$	Q	T
1	0	1	off
0	1	0	on
1	1	remain	remain

V_6	V_2	Q	T
$<2/3\ U_{CC}$	$<1/3\ U_{CC}$	1	off
$>2/3\ U_{CC}$	$>1/3\ U_{CC}$	0	on
$<2/3\ U_{CC}$	$>1/3\ U_{CC}$	remain	remain

Monostable Multivibrator & Waveforms

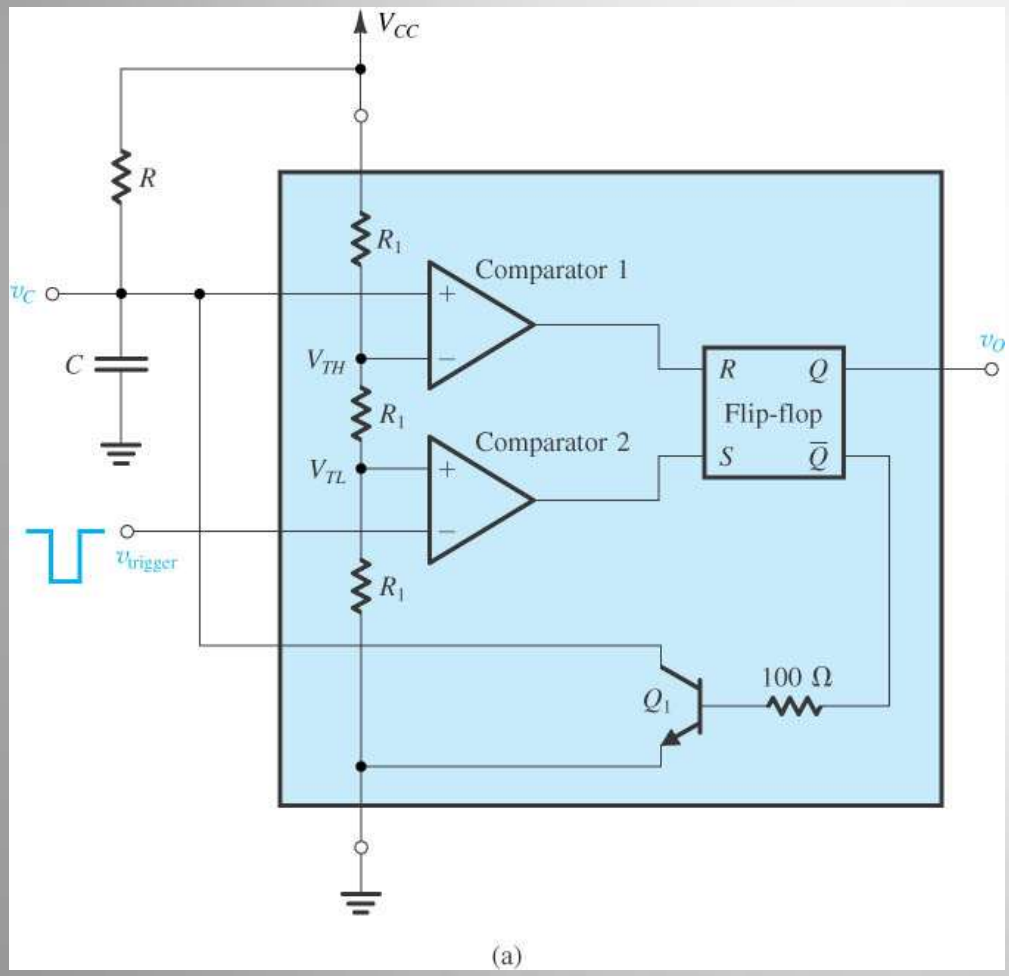

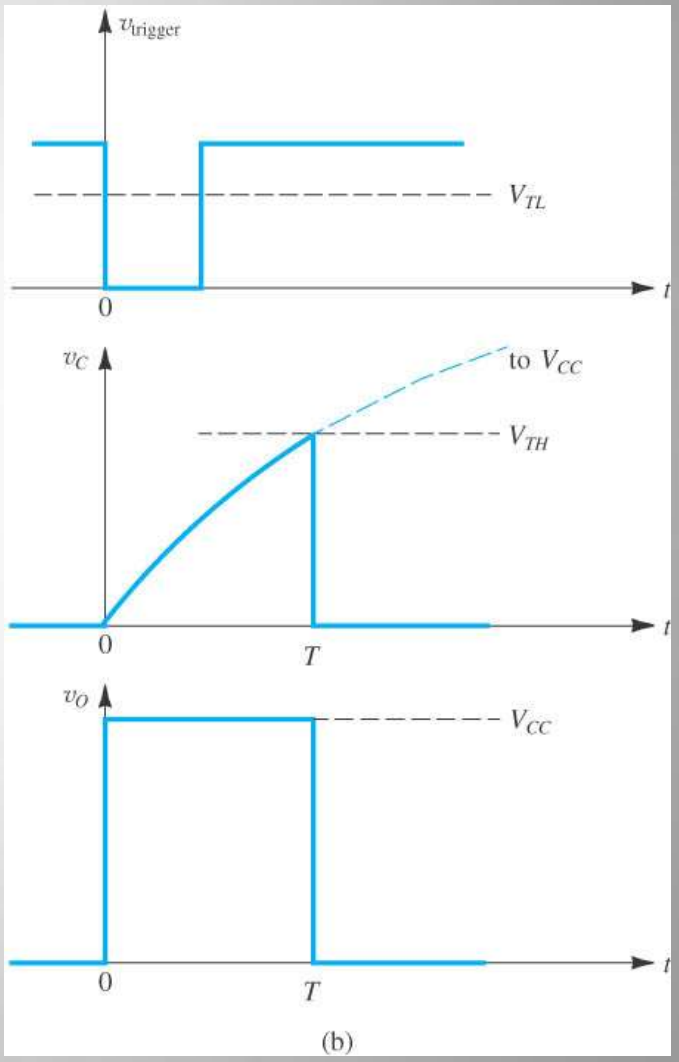

Monostable Multivibrator (One-shot) Operation

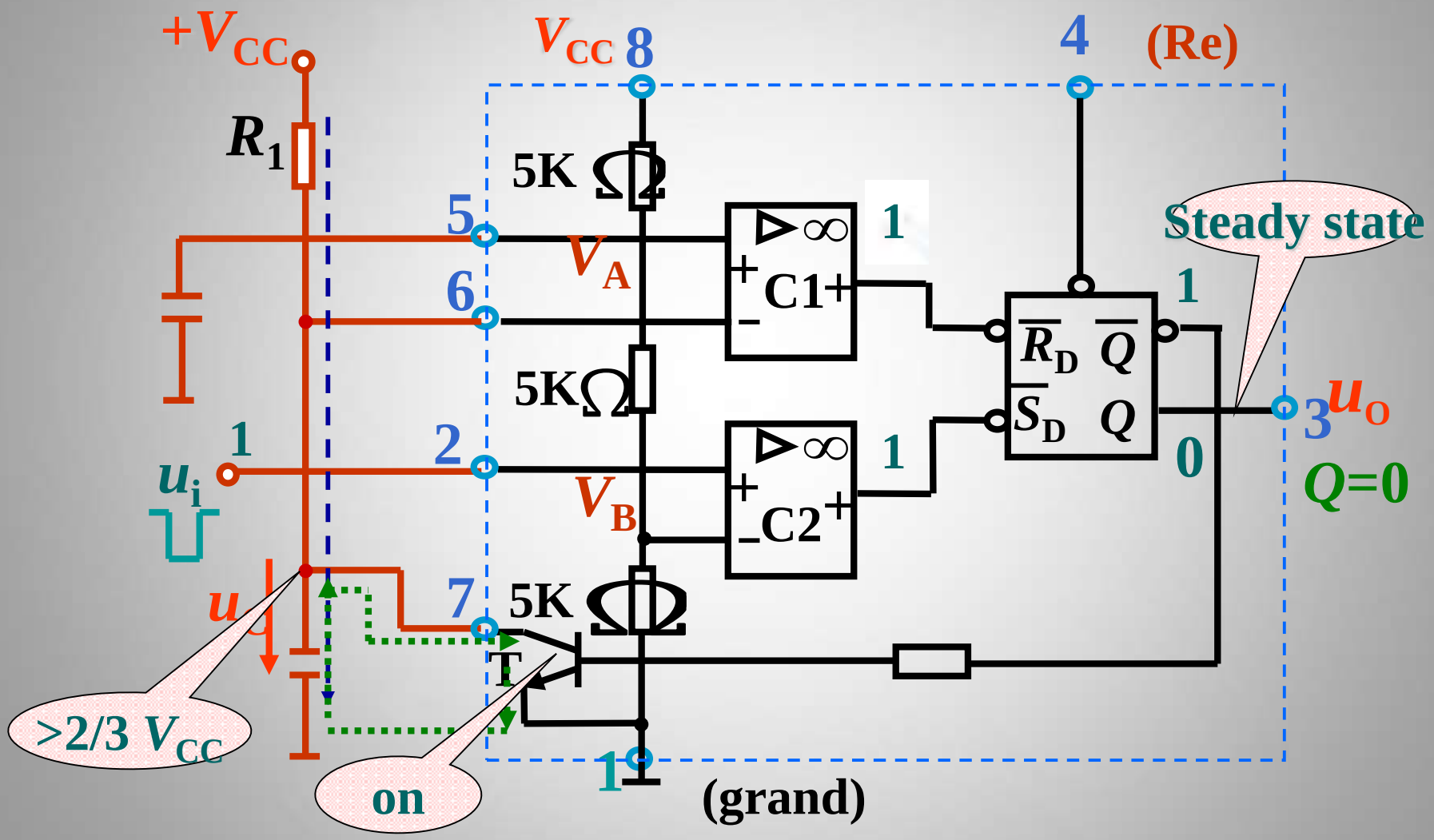

Monostable Multivibrator (One-shot) Operation

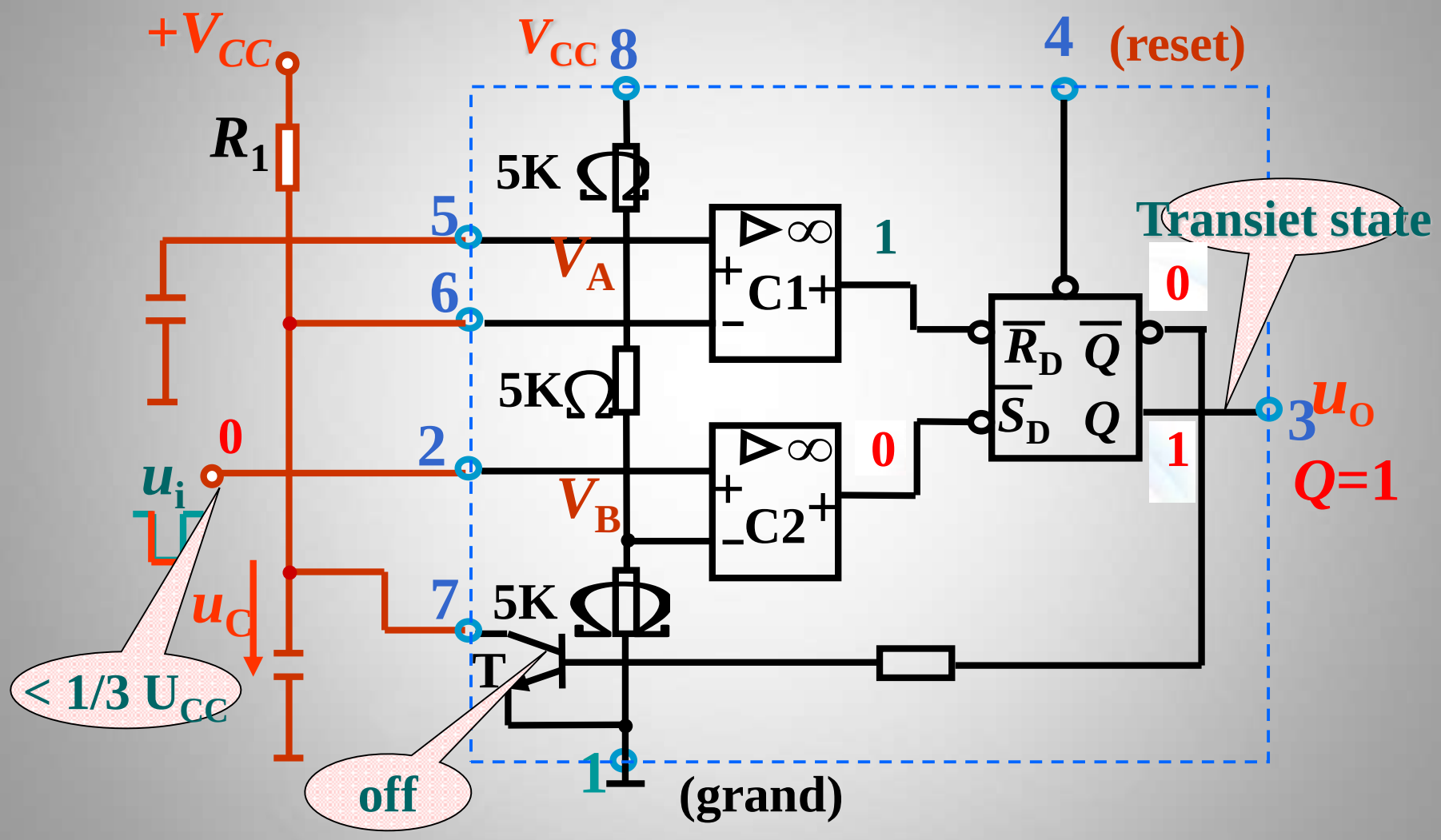

Monostable Multivibrator(One-shot) Operation

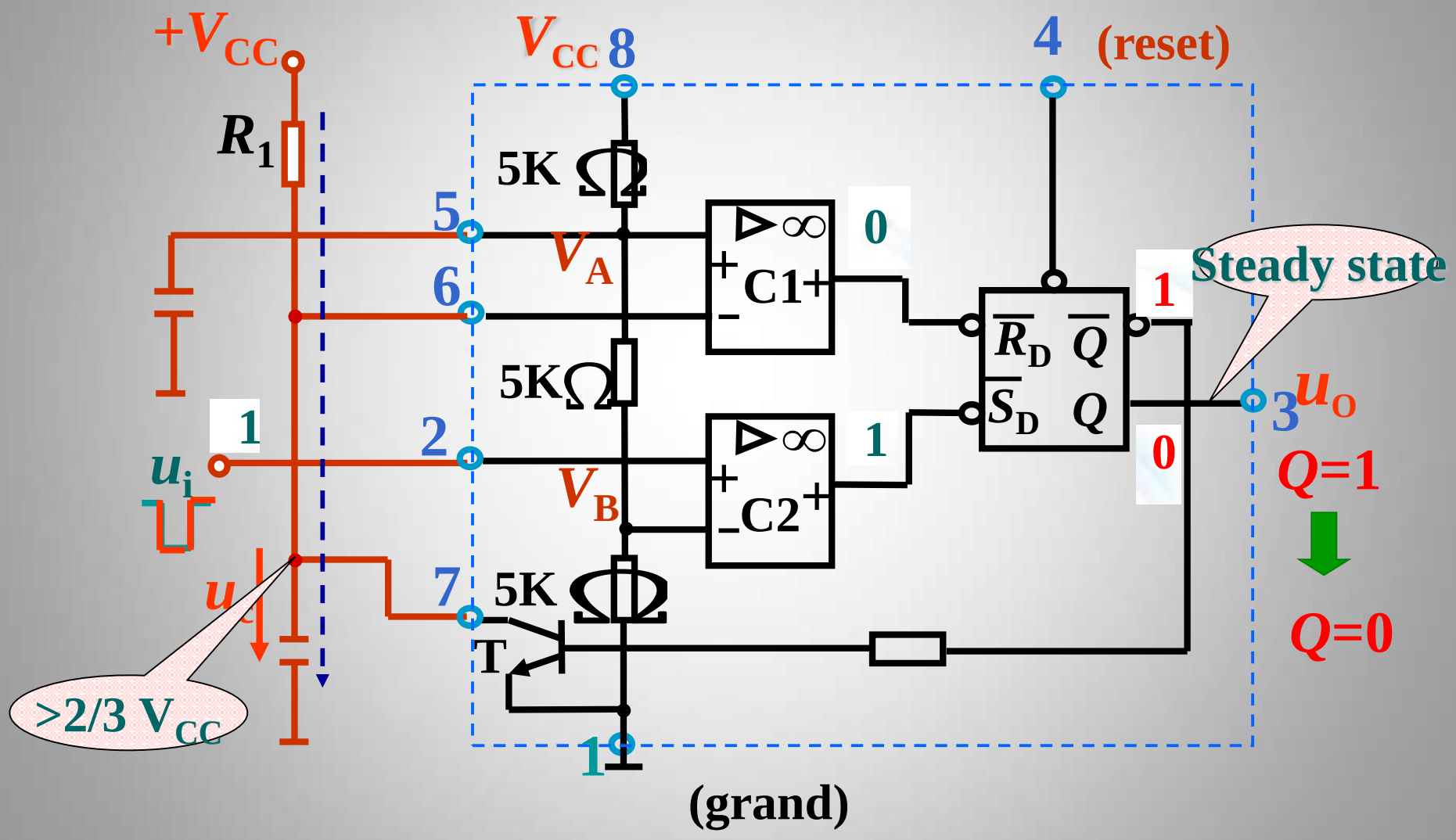

What is a monostable multivibrator?

- With one stable state
- Normally in its stable state,to change to its unstable state only when triggered
- Once triggered,to remain in its unstable state for a predetermined length of time and then return to its stable state automatically

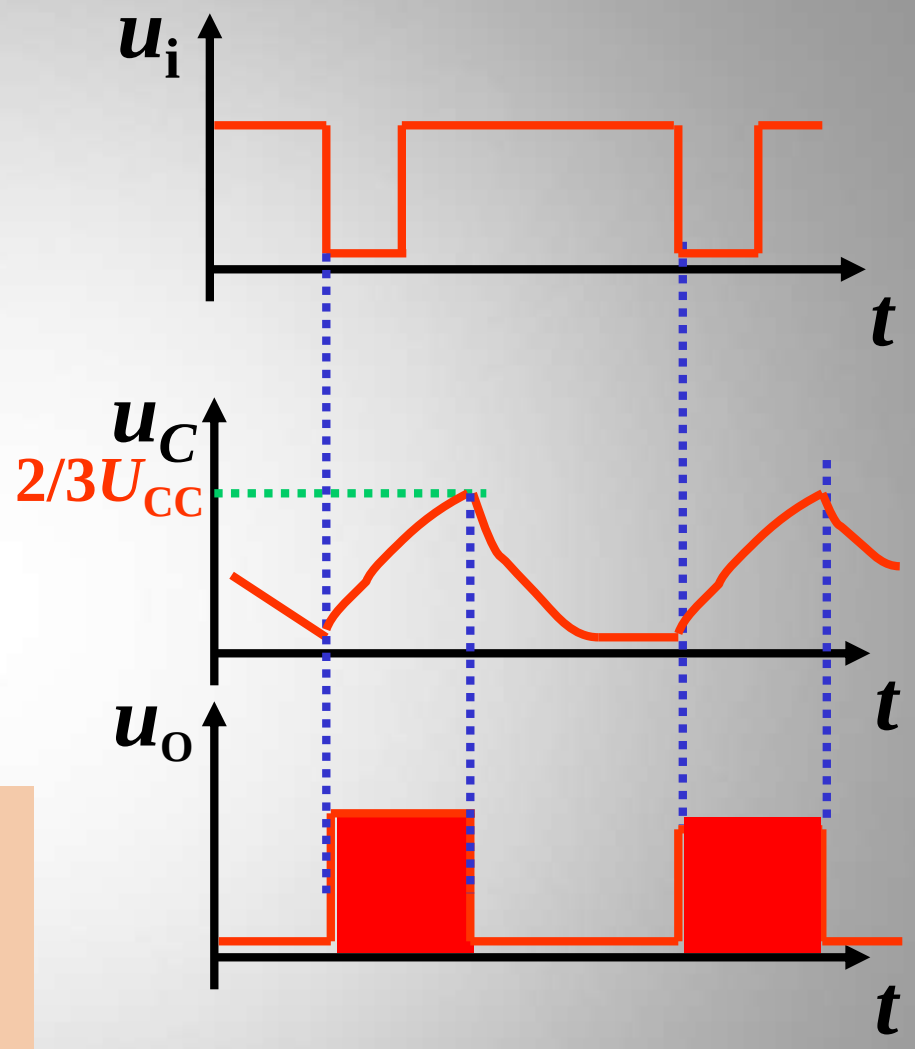

$t_p = RC \ln 3 = 1.1RC$

Astable Multivibrator & Waveforms

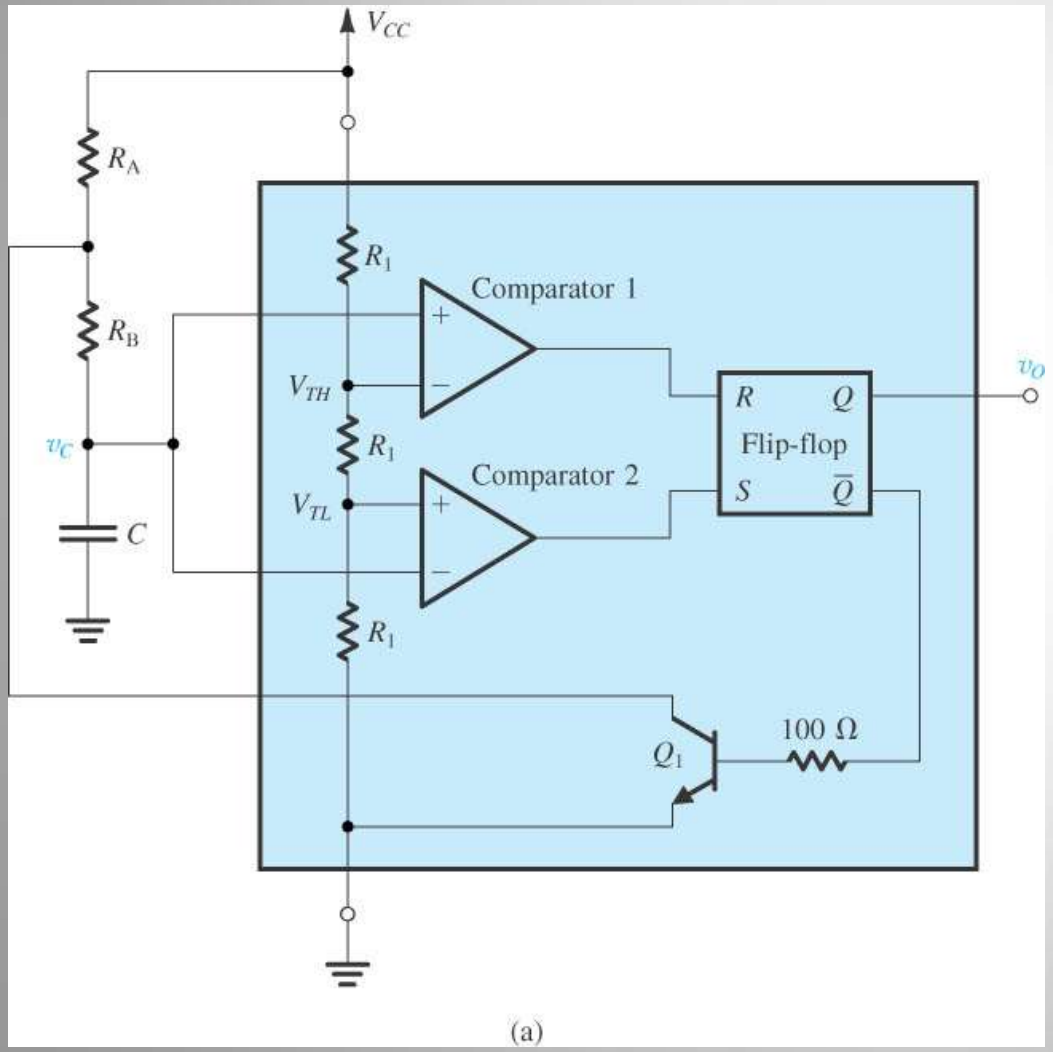

(a)

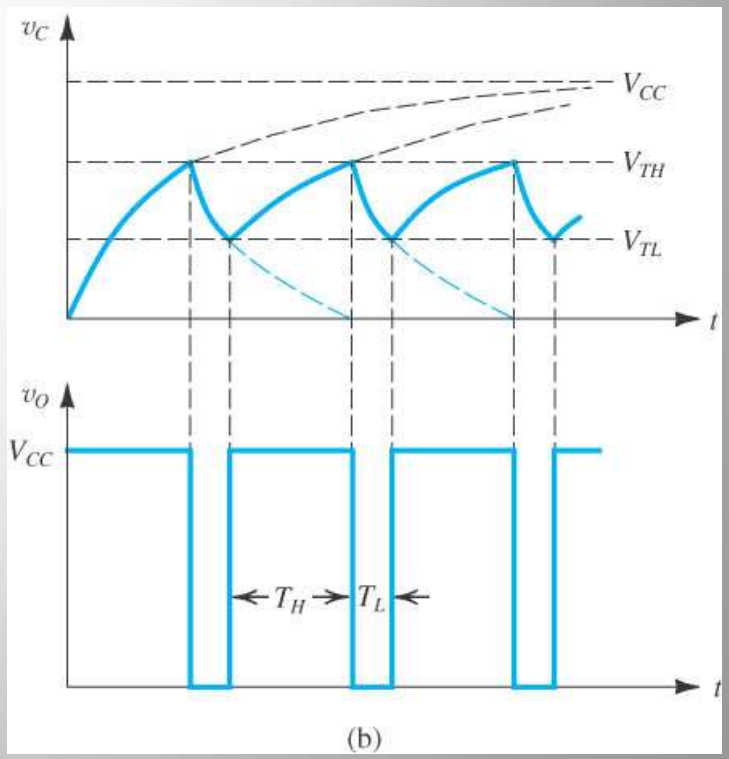

(b)

2) Astable Multivibrator(Oscillator)

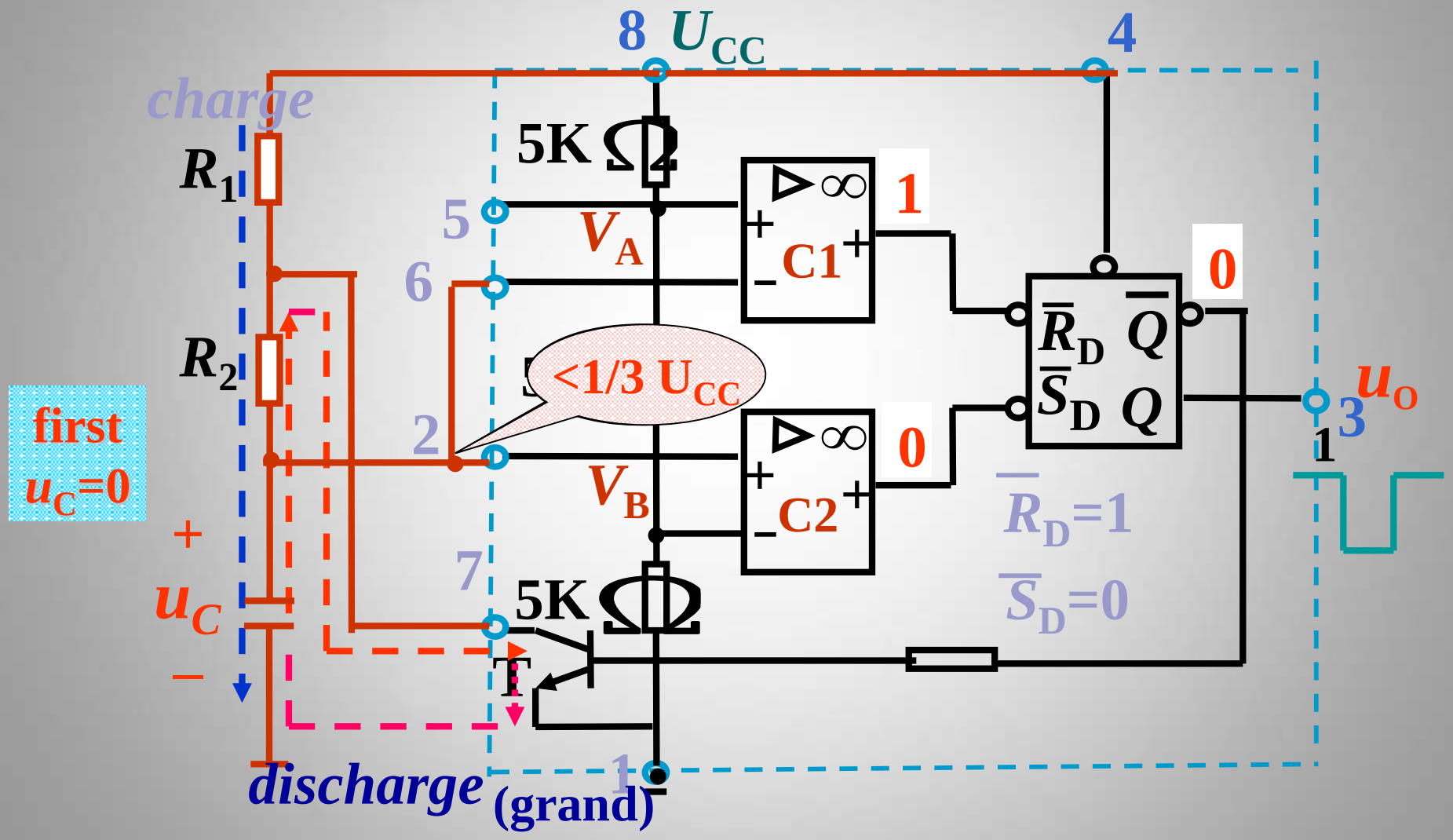

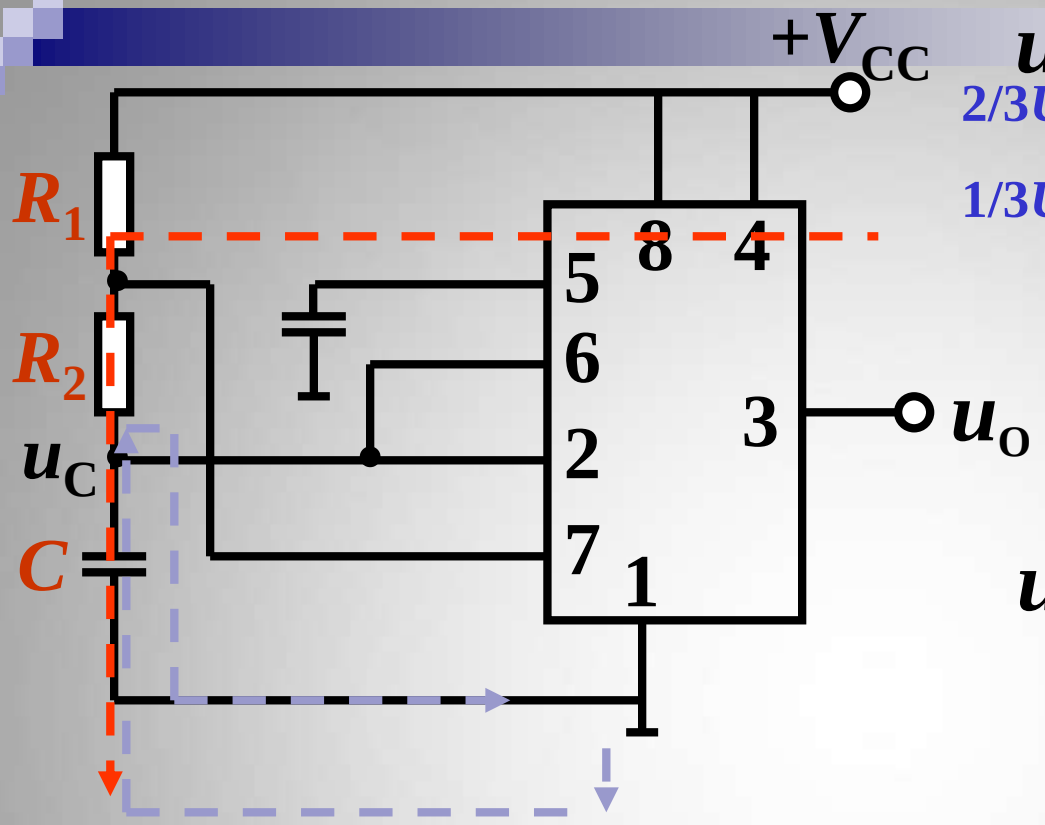

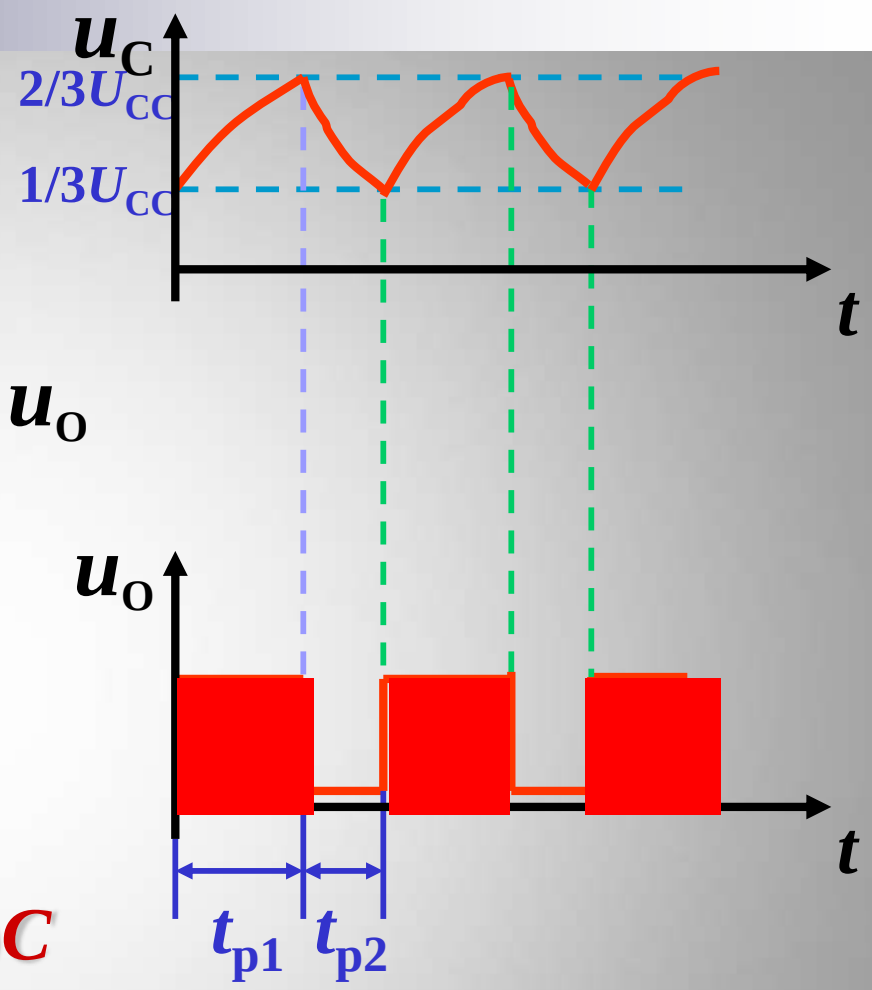

$$t_{p1}=(R_1+R_2)C\ \ln 2=0.7(R_1+R_2)C$$

$$t_{p2}=R_2C\ \ln 2=0.7R_2C$$

$$T=t_{p1}+t_{p2}=0.7(R_1+2R_2)C$$

Duty Cycle = t_{p1}/T

What is an astable multivibrator?

Applications using 555 timer

- A light dimmer ;
- A car tachometer
- Traffic Lights ;
- Infra Red (IR) remote control ;